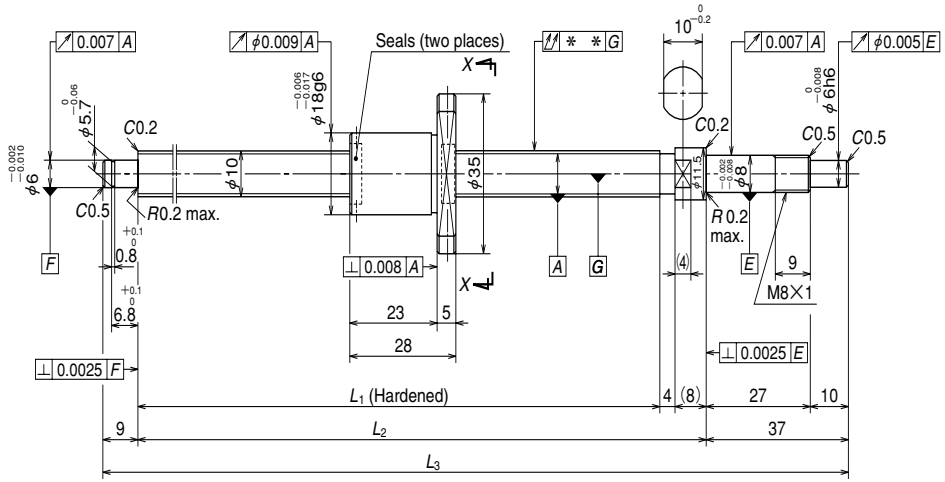

NSK

φ10×2

Standard stock

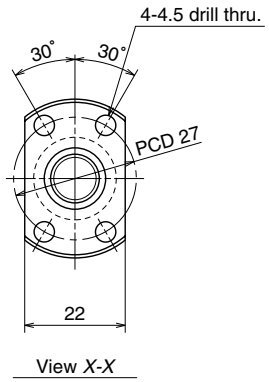

Unit: mm

Ball screw specifications			
Product classification		Preloaded	Precise clearance
Shaft dia. × Lead / Direction of turn		10×2/Right	
Preload / Ball recirculation		P preload / Deflector	
Ball dia. / Ball circle dia.		1.200/10.3	
Effective turns of balls		1×3	
Accuracy grade / Preload / Axial play		C3/Z	C3/T
Basic load rating (N)	Dynamic C_a	1490	
	Static C_{0a}	2850	
Axial play		0	0.005 or less
Dynamic friction torque, (N·cm)		0.1～2.4	～0.5
Spacer ball		None	
Factory packed grease		NSK grease PS2	

B 52

Unit: mm

Ball screw No.		Stroke		Screw shaft length			Lead accuracy			Shaft run-out **	Mass (Kg)	Permissible rotational speed N (min⁻¹) Supporting condition
Preloaded (MPFD)	Precise clearance (MSFD)	Nominal	Maximum (L_1–Nut length)	L_1	L_2	L_3	T	e_p	υ_u			Fixed - Simple support
W1001MA-1PY-C3Z2	**W1001MA-2Y-C3T2**	50	72	100	112	158	0	0.008	0.008	0.020	0.13	3000
W1001MA-3PY-C3Z2	**W1001MA-4Y-C3T2**	100	122	150	162	208	0	0.010	0.008	0.030	0.16	3000
W1002MA-1PY-C3Z2	**W1002MA-2Y-C3T2**	150	172	200	212	258	0	0.010	0.008	0.030	0.19	3000
W1002MA-3PY-C3Z2	**W1002MA-4Y-C3T2**	200	222	250	262	308	0	0.012	0.008	0.030	0.22	3000

Remarks
1. We recommend NSK support unit WBK08-01A (square type, fixed side), WBK08S-01 (square type, simple support side), and WBK08-11 (round type, fixed side).
2. NSK grease PS2 is recommended. Apply to the screw shaft surface when replenishing.
3. Permissible rotational speed is determined by a d · n value and a critical speed. See page B509.
Root diameter of screw shaft (dr) is 8.9 mm.