NSK

φ10×4

Standard stock

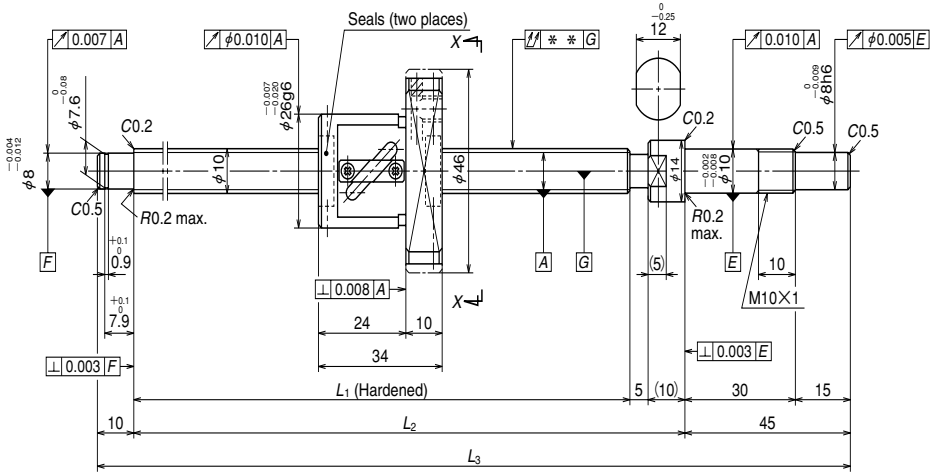

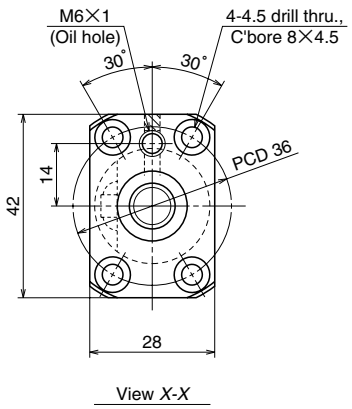

Unit: mm

Ball screw specifications			
Product classification		Preloaded	Precise clearance
Shaft dia. × Lead / Direction of turn		10×4/Right	
Preload / Ball recirculation		P preload / Return tube	
Ball dia. / Ball circle dia.		2.000/10.3	
Effective turns of balls		2.5×1	
Accuracy grade / Preload / Axial play		C3/Z	C3/T
Basic load rating (N)	Dynamic C_a	1730	2740
	Static C_{0a}	2230	4450
Axial play		0	0.005 or less
Dynamic friction torque, (N·cm)		0.5~3.9	~1.0
Spacer ball		Yes	None
Factory packed grease		NSK grease PS2	
Internal spatial volume of nut (cm³)		0.8	

B 56

Unit: mm

Ball screw No.		Stroke		Screw shaft length			Lead accuracy			Shaft run-out **	Mass (Kg)	Permissible rotational speed N (min⁻¹) Supporting condition
Preloaded (PFT)	Precise clearance (SFT)	Nominal	Maximum (L_1–Nut length)	L_1	L_2	L_3	T	e_p	υ_u			Fixed - Simple support
W1001FA-1P-C3Z4	**W1001FA-2-C3T4**	50	76	110	125	180	0	0.010	0.008	0.020	0.26	3000
W1001FA-3P-C3Z4	**W1001FA-4-C3T4**	100	126	160	175	230	0	0.010	0.008	0.030	0.28	3000
W1002FA-1P-C3Z4	**W1002FA-2-C3T4**	150	176	210	225	280	0	0.012	0.008	0.030	0.31	3000
W1002FA-3P-C3Z4	**W1002FA-4-C3T4**	200	226	260	275	330	0	0.012	0.008	0.040	0.34	3000
W1003FA-1P-C3Z4	**W1003FA-2-C3T4**	250	276	310	325	380	0	0.012	0.008	0.040	0.37	3000
W1003FA-3P-C3Z4	**W1003FA-4-C3T4**	300	326	360	375	430	0	0.013	0.010	0.050	0.39	3000

Remarks
1. We recommend NSK support unit WBK10-01A (square type, fixed side), WBK10S-01 (square type, simple support side), and WBK10-11 (round type, fixed side).
2. NSK grease PS2 is recommended. The amount for replenishing should be about 50% of nut internal space capacity.
3. Permissible rotational speed is determined by a d · n value and a critical speed. See page B509.
Root diameter of screw shaft (dr) is 8.2 mm.