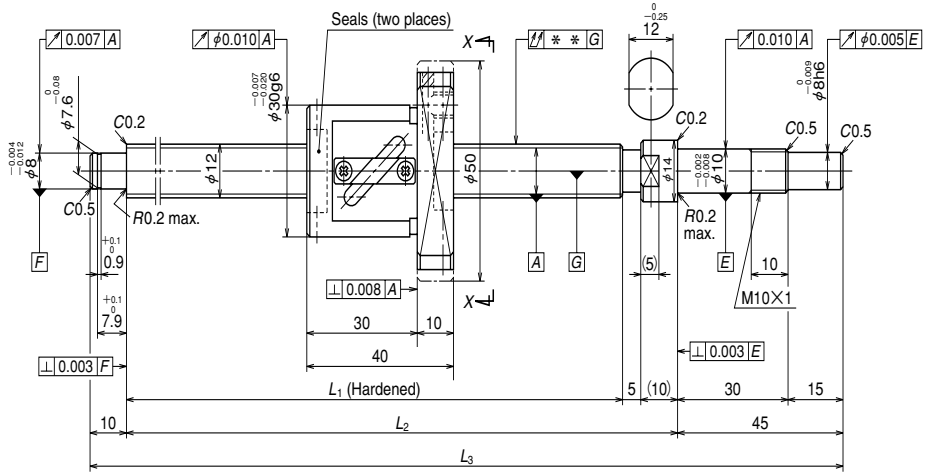

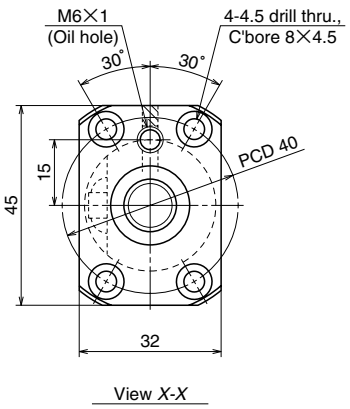

Unit: mm

Ball screw specifications			
Product classification		Preloaded	Precise clearance
Shaft dia. × Lead / Direction of turn		12×5/Right	
Preload / Ball recirculation		P preload / Return tube	
Ball dia. / Ball circle dia.		2.381/12.3	
Effective turns of balls		2.5×1	
Accuracy grade / Preload / Axial play		C3/Z	C3/T
Basic load rating (N)	Dynamic C_a	2370	3760
	Static C_{0a}	3160	6310
Axial play		0	0.005 or less
Dynamic friction torque, (N·cm)		1.0~4.4	~1.0
Spacer ball		Yes	None
Factory packed grease		NSK grease PS2	
Internal spatial volume of nut (cm³)		1.2	

Unit: mm

Ball screw No.		Stroke		Screw shaft length			Lead accuracy			Shaft run-out **	Mass (Kg)	Permissible rotational speed N (min⁻¹) Supporting condition
Preloaded (PFT)	Precise clearance (SFT)	Nominal	Maximum (L_1–Nut length)	L_1	L_2	L_3	T	e_p	υ_u			Fixed - Simple support
W1201FA-1P-C3Z5	**W1201FA-2-C3T5**	50	70	110	125	180	0	0.010	0.008	0.020	0.35	3000
W1201FA-3P-C3Z5	**W1201FA-4-C3T5**	100	120	160	175	230	0	0.010	0.008	0.030	0.38	3000
W1202FA-1P-C3Z5	**W1202FA-2-C3T5**	150	170	210	225	280	0	0.012	0.008	0.030	0.42	3000
W1202FA-3P-C3Z5	**W1202FA-4-C3T5**	200	220	260	275	330	0	0.012	0.008	0.040	0.46	3000
W1203FA-1P-C3Z5	**W1203FA-2-C3T5**	250	270	310	325	380	0	0.012	0.008	0.040	0.50	3000
W1204FA-1P-C3Z5	**W1204FA-2-C3T5**	350	370	410	425	480	0	0.015	0.010	0.050	0.58	3000
W1205FA-1P-C3Z5	**W1205FA-2-C3T5**	450	470	510	525	580	0	0.016	0.012	0.065	0.66	3000

Remarks
1. We recommend NSK support unit WBK10-01A (square type, fixed side), WBK10S-01 (square type, simple support side), and WBK10-11 (round type, fixed side).
2. NSK grease PS2 is recommended. The amount for replenishing should be about 50% of nut internal space capacity.
3. Permissible rotational speed is determined by a d · n value and a critical speed. See page B509.
Root diameter of screw shaft (dr) is 9.8 mm.