NSK

φ14×5

Standard stock

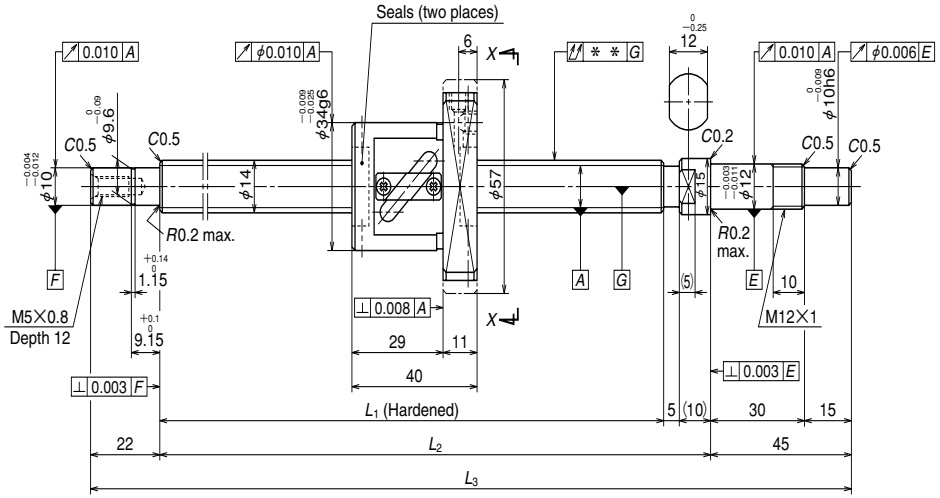

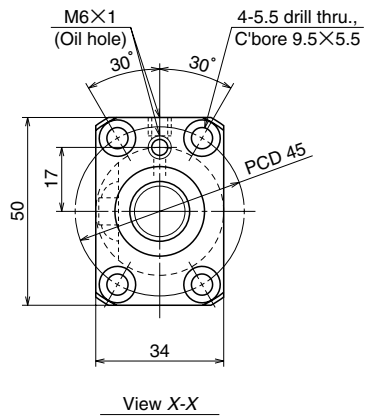

Unit: mm

Ball screw specifications			
Product classification		Preloaded	Precise clearance
Shaft dia. × Lead / Direction of turn		14×5/Right	
Preload / Ball recirculation		P preload / Return tube	
Ball dia. / Ball circle dia.		3.175/14.5	
Effective turns of balls		2.5×1	
Accuracy grade / Preload / Axial play		C3/Z	C3/T
Basic load rating (N)	Dynamic C_a	4280	6790
	Static C_{0a}	5840	11700
Axial play		0	0.005 or less
Dynamic friction torque, (N·cm)		1.5~6.9	~2.0
Spacer ball		Yes	None
Factory packed grease		NSK grease LR3	
Internal spatial volume of nut (cm³)		2.2	

Unit: mm

Ball screw No.		Stroke		Screw shaft length			Lead accuracy			Shaft run-out **	Mass (Kg)	Permissible rotational speed N (min⁻¹) Supporting condition	
Preloaded (PFT)	Precise clearance (SFT)	Nominal	Maximum (L_1–Nut length)	L_1	L_2	L_3	T	e_p	υ_u			Fixed - Simple support	Fixed - Fixed
W1401FA-1P-C3Z5	**W1401FA-2-C3T5**	100	149	189	204	271	0	0.010	0.008	0.020	0.52	3000	3000
W1402FA-1P-C3Z5	**W1402FA-2-C3T5**	150	199	239	254	321	0	0.012	0.008	0.030	0.57	3000	3000
W1403FA-1P-C3Z5	**W1403FA-2-C3T5**	250	299	339	354	421	0	0.013	0.010	0.035	0.67	3000	3000
W1404FA-1P-C3Z5	**W1404FA-2-C3T5**	350	399	439	454	521	0	0.015	0.010	0.045	0.77	3000	3000
W1405FA-1P-C3Z5	**W1405FA-2-C3T5**	450	499	539	554	621	0	0.016	0.012	0.045	0.87	3000	3000
W1406FA-1P-C3Z5	**W1406FA-2-C3T5**	600	649	689	704	771	0	0.018	0.013	0.055	1.0	3000	3000

Remarks
1. We recommend NSK support unit WBK12-01A (square type, fixed side), WBK12S-01 (square type, simple support side), and WBK12-11 (round type, fixed side).
2. NSK grease LR3 is recommended. The amount for replenishing should be about 50% of nut internal space capacity.
3. Permissible rotational speed is determined by a d · n value and a critical speed. See page B509.
Root diameter of screw shaft (dr) is 11.2 mm.