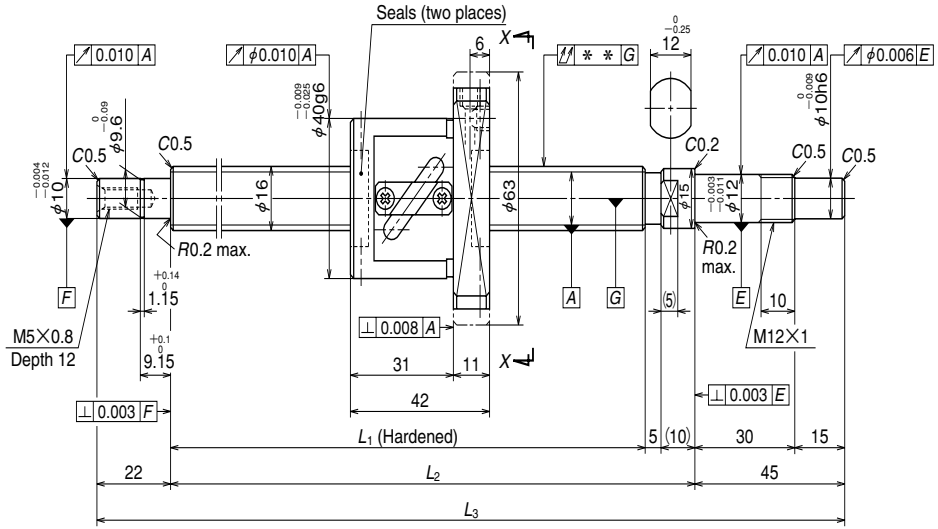

Ball screw No.		Stroke	
Preloaded (PFT)	Precise clearance (SFT)	Nominal	Maximum (L_1–Nut length)
W1601FA-1P-C3Z5	**W1601FA-2-C3T5**	100	147
W1602FA-1P-C3Z5	**W1602FA-2-C3T5**	200	247
W1603FA-1P-C3Z5	**W1603FA-2-C3T5**	300	347
W1604FA-1P-C3Z5	**W1604FA-2-C3T5**	400	447
W1606FA-1P-C3Z5	**W1606FA-2-C3T5**	600	647
W1608FA-1P-C3Z5	**W1608FA-2-C3T5**	800	847

Remarks 1. We recommend NSK support unit WBK12-01A (square type, fixed side), WBK12S-01 (square type, simple support side), and WBK12-11 (round type, fixed side).
2. NSK grease LR3 is recommended. The amount for replenishing should be about 50% of nut internal space capacity.
3. Permissible rotational speed is determined by a d · n value and a critical speed. See page B509.
Root diameter of screw shaft (dr) is 13.2 mm.

NSK

φ16×5

Standard stock

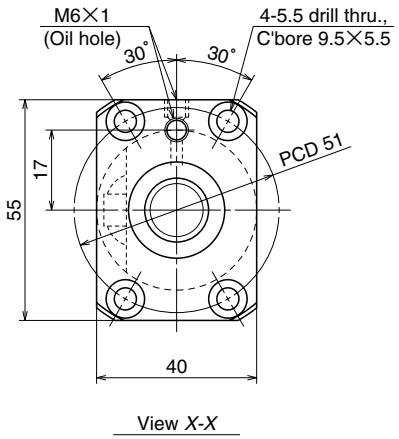

Unit: mm

Ball screw specifications			
Product classification		Preloaded	Precise clearance
Shaft dia. × Lead / Direction of turn		16×5/Right	
Preload / Ball recirculation		P preload / Return tube	
Ball dia. / Ball circle dia.		3.175/16.5	
Effective turns of balls		2.5×1	
Accuracy grade / Preload / Axial play		C3/Z	C3/T
Basic load rating (N)	Dynamic C_a	4620	7330
	Static C_{0a}	6750	13500
Axial play		0	0.005 or less
Dynamic friction torque, (N · cm)		1.5～7.8	～2.0
Spacer ball		Yes	None
Factory packed grease		NSK grease LR3	
Internal spatial volume of nut (cm³)		2.6	

B 78

Unit: mm

Screw shaft length			Lead accuracy			Shaft run-out **	Mass (Kg)	Permissible rotational speed N (min⁻¹) Supporting condition	
L_1	L_2	L_3	T	e_p	υ_u			Fixed - Simple support	Fixed - Fixed
189	204	271	0	0.010	0.008	0.020	0.70	3000	3000
289	304	371	0	0.012	0.008	0.030	0.83	3000	3000
389	404	471	0	0.013	0.010	0.035	0.97	3000	3000
489	504	571	0	0.015	0.010	0.045	1.1	3000	3000
689	704	771	0	0.018	0.013	0.055	1.4	3000	3000
889	904	971	0	0.021	0.015	0.075	1.6	2570	3000