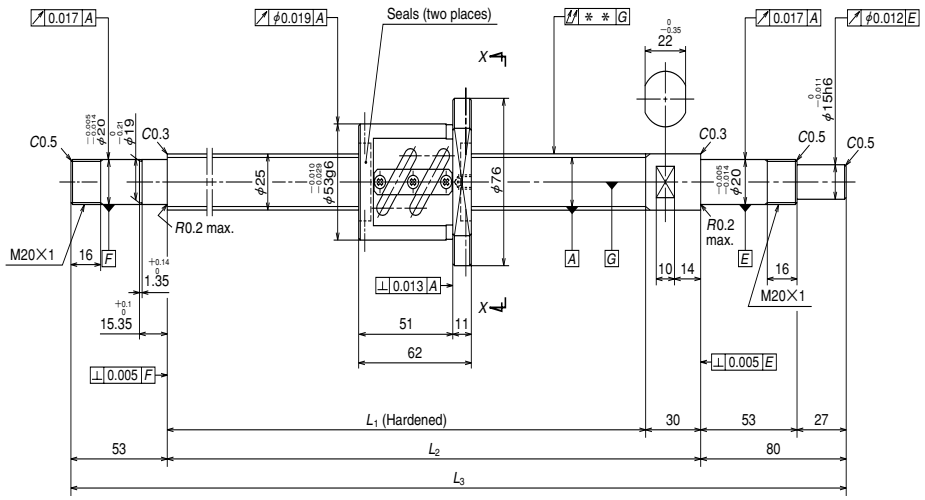

NSK

φ25×6

Standard stock

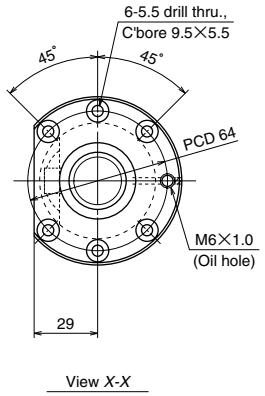

Unit: mm

Ball screw specifications		
Shaft dia. × Lead / Direction of turn		25×6/Right
Preload / Ball recirculation		P preload / Return tube
Ball dia. / Ball circle dia.		3.969/25.5
Effective turns of balls		2.5×2
Accuracy grade / Preload		C5/Z
Basic load rating (N)	Dynamic C_a	14100
	Static C_{0a}	26800
Preload (N)		685
Dynamic friction torque, median, (N·cm)		13.8
Spacer ball		Yes
Factory packed grease		**Refer to Remarks 2.**
Internal spatial volume of nut (cm³)		7.0

B 98

Unit: mm

Ball screw No.	Stroke		Screw shaft length			Lead accuracy			Shaft run-out **	Mass (Kg)	Permissible rotational speed N (min⁻¹) Supporting condition	
	Nominal	Maximum (L_1–Nut length)	L_1	L_2	L_3	T	e_p	υ_u			Fixed - Simple support	Fixed - Fixed
W2503SA-3P-C5Z6	250	308	370	400	533	–0.009	0.025	0.020	0.050	2.5	2800	2800
W2505SA-3P-C5Z6	450	508	570	600	733	–0.014	0.030	0.023	0.060	3.2	2800	2800
W2507SA-3P-C5Z6	650	708	770	800	933	–0.018	0.035	0.025	0.075	3.9	2800	2800
W2511SA-2P-C5Z6	1050	1108	1170	1200	1333	–0.028	0.046	0.030	0.120	5.2	2410	2800

Remarks 1. We recommend NSK support unit WBK20-01A (square type, fixed side), WBK20S-01 (square type, simple support side), and WBK20-11 (round type, fixed side).
2. Only rust preventive agent is applied at time of delivery. Please apply lubricant (oil or grease) before use.
3. Permissible rotational speed is determined by a d · n value and a critical speed. See page B509.
Root diameter of screw shaft (dr) is 21.4 mm.