φ16×5、φ16×16、φ20×10、φ20×20

Standard stock

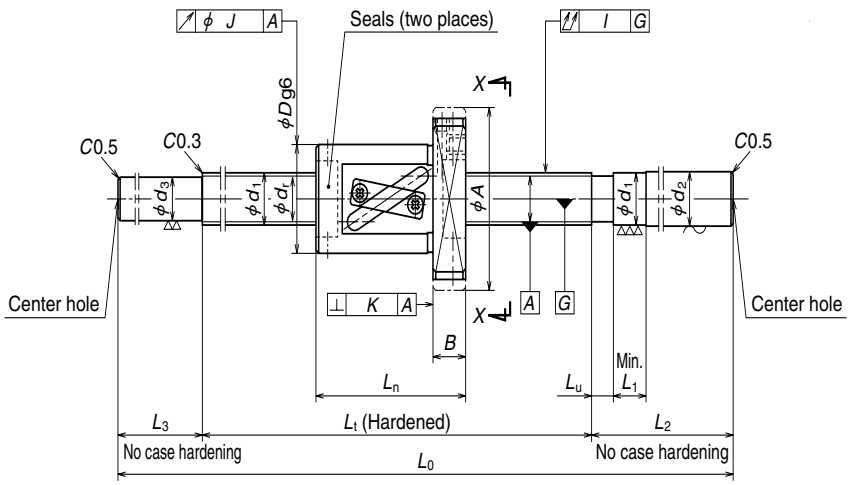

Nut type code: SFT, LSFT

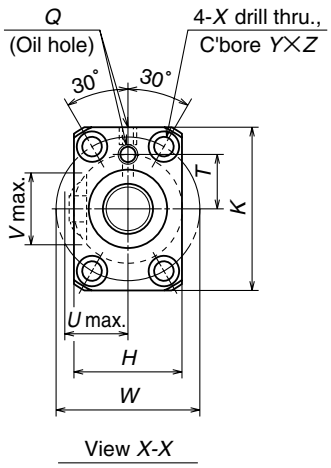

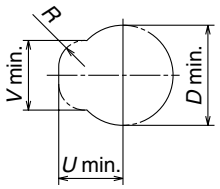

Housing hole and its clearance
(Only applicable to shaft dia. 16×lead 16)

Unit: mm

Ball screw No.	Stroke Max. L_t-L_n	Screw shaft dia. d_1	Lead l	Ball dia. D_w	Ball circle dia. d_m	Root dia. d_r	Effective ball turns: Turns × Circuits	Basic load rating (N) Dynamic C_a	Basic load rating (N) Static C_{0a}	Axial play Max.	Nut: Outside dia. D	Flange A	Flange H	Flange K	Flange B	Overall length L_n	Bolt W	Bolt X
W1605FS-1-C3T5	458	16	5	3.175	16.5	13.2	2.5×1	7330	13500	0.005	40	63	40	55	11	42	51	5.5
W1609FS-1-C3T5	858																	
W1606FS-1-C5T16	544	16	16	3.175	16.75	13.4	1.5×1	4710	8110	0.005	34	57	34	50	12	56	45	5.5
W1611FS-1-C5T16	1044																	
W2009FS-1-C5T10	846	20	10	3.969	21	16.9	2.5×1	10900	21700	0.005	46	74	46	66	13	54	59	6.6
W2013FS-1-C5T10	1246																	
W2010FS-1-C5T20	937	20	20	3.969	21	16.9	1.5×1	7040	12700	0.005	46	74	46	66	13	63	59	6.6
W2015FS-1-C5T20	1437																	

Ball screw No.	dimensions: hole Y	hole Z	Projecting tube U	Projecting tube V	Projecting tube R	Oil hole Q	Oil hole T	Screw shaft dimensions: Threaded length L_t	Shaft end, right d_2	Shaft end, right L_u	Shaft end, right L_1	Shaft end, right L_2	Shaft end, left d_3	Shaft end, left L_3	Overall length L_0	Lead accuracy T	Deviation e_p	Variation υ_u	Run out: Shaft straightness I	Nut O.D. eccentricity J	Flange perpendicularity K	Mass (Kg)	Permissible rotational speed N(min⁻¹)
W1605FS-1-C3T5	9.5	5.5	—	—	—	M6×1	17	500	16.2	5	40	150	13.2	60	710	0	0.015	0.010	0.055	0.012	0.008	1.4	3000
W1609FS-1-C3T5								900							1110		0.021	0.015	0.095			1.9	
W1606FS-1-C5T16	9.5	5.5	19	20	8	M6×1	17	600	16.2	10	40	150	13.4	60	810	0	0.030	0.023	0.085	0.015	0.011	1.5	3000
W1611FS-1-C5T16								1100							1310		0.046	0.030	0.150			2.3	
W2009FS-1-C5T10	11	6.5	—	—	—	M6×1	24	900	20.2	10	60	150	16.9	80	1130	0	0.040	0.027	0.110	0.015	0.011	3.2	3000
W2013FS-1-C5T10								1300							1530		0.054	0.035	0.150			4.1	
W2010FS-1-C5T20	11	6.5	—	—	—	M6×1	24	1000	20.2	13	60	150	16.9	80	1230	0	0.040	0.027	0.110	0.015	0.011	3.6	3000
W2015FS-1-C5T20								1500							1730		0.054	0.035	0.200			4.8	

Remarks: 1. NSK support unit is recommended.
2. Only rust preventive agent is applied at time of delivery. Please apply lubricant (oil or grease) before use.
3. Permissible rotational speed is determined by a d · n value and a critical speed. See page B509.