φ32×5、φ32×6、φ32×8

Standard stock

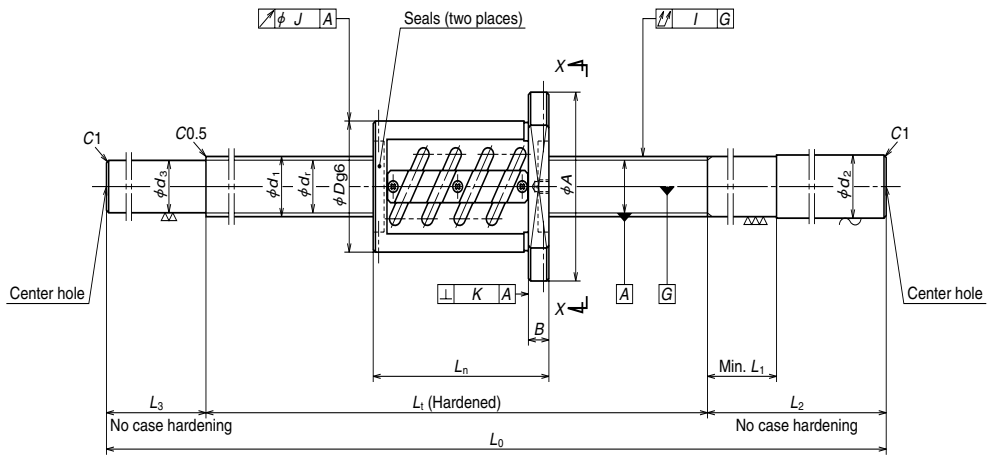

Nut type code: ZFT

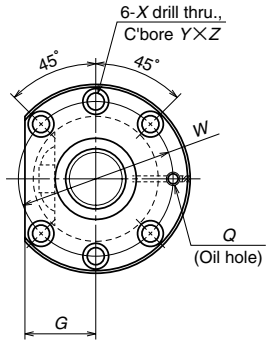

View X-X

B 214

Unit: mm

Ball screw No.	Stroke Max. L_t-L_n	Screw shaft dia. d_1	Lead l	Ball dia. D_w	Ball circle dia. d_m	Root dia. d_r	Effective ball turns Turns × Circuits	Basic load rating (N) Dynamic C_a	Basic load rating (N) Static C_{0a}	Preload (N)	Dynamic friction torque, median (N・cm)	Nut Outside dia. D	Nut Flange A	Nut Flange G	Nut Flange B	Nut Overall length L_n
W3204SS-2Z-C5Z5	314	32	5	3.175	32.5	29.2	2.5×2	18500	56100	1270	22.5	58	85	32	12	86
W3206SS-2Z-C5Z5	514															
W3208SS-2Z-C5Z5	714															
W3212SS-2Z-C5Z5	1114															
W3215SS-2Z-C5Z5	1414															
W3206SS-4Z-C5Z6	501	32	6	3.969	32.5	28.4	2.5×2	24700	69400	1720	34.5	62	89	34	12	99
W3210SS-2Z-C5Z6	901															
W3215SS-4Z-C5Z6	1401															
W3206SS-5Z-C5Z8	518	32	8	4.762	32.5	27.5	2.5×1	17500	41000	1320	30.5	66	100	38	15	82
W3210SS-3Z-C5Z8	918															
W3215SS-5Z-C5Z8	1418															

dimensions Bolt hole W	dimensions Bolt hole X	dimensions Bolt hole Y	dimensions Bolt hole Z	dimensions Oil hole Q	Screw shaft dimensions Threaded length L_t	Screw shaft dimensions Shaft end, right d_2	Screw shaft dimensions Shaft end, right L_1	Screw shaft dimensions Shaft end, right L_2	Screw shaft dimensions Shaft end, left d_3	Screw shaft dimensions Shaft end, left L_3	Screw shaft dimensions Overall length L_0	Lead accuracy Travel compensation T	Lead accuracy Deviation e_p	Lead accuracy Variation v_u	Run out Shaft straightness I	Run out Nut O.D. eccentricity J	Run out Flange perpendicularity K	Mass (Kg)	Permissible rotational speed N(min⁻¹)
71	6.6	11	6.5	M6×1	400	32.3	40	200	29.2	50	650	-0.010	0.025	0.020	0.060	0.019	0.013	5.1	2180
					600			250		100	950	-0.014	0.030	0.023	0.075			6.9	
					800			250		100	1150	-0.019	0.035	0.025	0.090			8.0	
					1200			300		100	1600	-0.029	0.046	0.030	0.120			10.1	
					1500			300		100	1900	-0.036	0.054	0.035	0.150			12.4	
75	6.6	11	6.5	M6×1	600	32.3	40	250	28.4	100	950	-0.014	0.030	0.023	0.075	0.019	0.013	7.1	2180
					1000			300			1400	-0.024	0.040	0.027	0.120			9.7	
					1500			300			1900	-0.036	0.054	0.035	0.150			12.6	
82	9	14	8.5	M6×1	600	32.3	50	250	27.5	100	950	-0.014	0.030	0.023	0.075	0.019	0.013	7.3	2180
					1000			300			1400	-0.024	0.040	0.027	0.120			9.8	
					1500			300			1900	-0.036	0.054	0.035	0.150			12.6	

Remarks: 1. NSK support unit is recommended.
2. Only rust preventive agent is applied at time of delivery. Please apply lubricant (oil or grease) before use.
3. Permissible rotational speed is determined by a d・n value and a critical speed. See page B509.