φ45×10、φ50×10

Standard stock

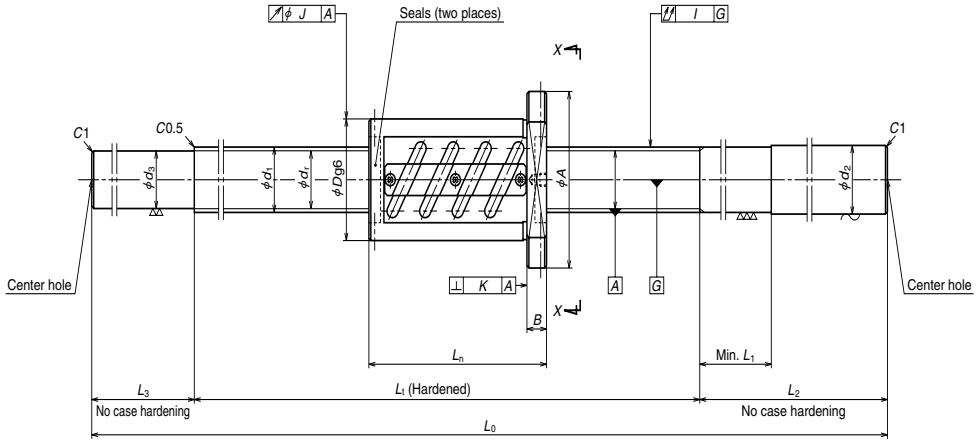

Nut type code: ZFT

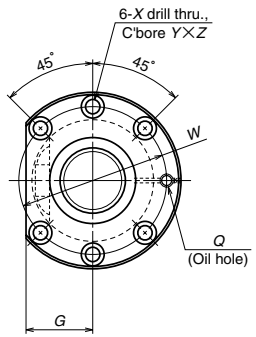

View X-X

B 230

Unit: mm

Ball screw No.	Stroke Max. L_t-L_n	Screw shaft dia. d_1	Lead l	Ball dia. D_w	Ball circle dia. d_m	Root dia. d_r	Effective ball turns: Turns × Circuits	Basic load rating (N): Dynamic C_a	Basic load rating (N): Static C_{0a}	Preload (N)	Dynamic friction torque, median (N・cm)	Nut: Outside dia. D	Nut: Flange A	Nut: Flange G	Nut: Flange B	Nut: Overall length L_n
W4510SS-1Z-C5Z10	897	45	10	6.350	46	39.4	2.5×1	29900	77300	2260	69	88	132	50	18	103
W4516SS-1Z-C5Z10	1497															
W4525SS-1Z-C5Z10	2397															
W5010SS-1Z-C5Z10	897	50	10	6.350	51	44.4	2.5×1	31800	87400	2450	78	93	135	51	18	103
W5015SS-1Z-C5Z10	1397															
W5020SS-1Z-C5Z10	1897															
W5026SS-1Z-C5Z10	2497															
W5010SS-2Z-C5Z10	837	50	10	6.350	51	44.4	2.5×2	57700	175000	4020	138	93	135	51	18	163
W5015SS-2Z-C5Z10	1337															
W5020SS-2Z-C5Z10	1837															
W5026SS-2Z-C5Z10	2437															

dimensions: Bolt hole W	Bolt hole X	Bolt hole Y	Bolt hole Z	Oil hole Q	Screw shaft dimensions: Threaded length L_t	Shaft end, right d_2	Shaft end, right L_1	Shaft end, right L_2	Shaft end, left d_3	Shaft end, left L_3	Overall length L_0	Lead accuracy: Travel compensation T	Lead accuracy: Deviation e_p	Lead accuracy: Variation υ_u	Run out: Shaft straightness I	Run out: Nut O.D. eccentricity J	Run out: Flange perpendicularity K	Mass (Kg)	Permissible rotational speed N(min⁻¹)
110	11	17.5	11	Rc1/8	1000	45.3	60	300	39.4	100	1400	-0.024	0.040	0.027	0.080	0.025	0.015	19.7	1550
					1600			400		150	2150	-0.038	0.054	0.035	0.130			28.1	
					2500			450		150	3100	-0.060	0.077	0.046	0.170			38.8	
113	11	17.5	11	Rc1/8	1000	50.3	60	300	44.4	100	1400	-0.024	0.040	0.027	0.080	0.025	0.015	23.8	1400
					1500			400		150	2050	-0.036	0.054	0.035	0.130			32.9	
					2000			400		150	2550	-0.048	0.065	0.040	0.170			39.8	
					2600			450		150	3200	-0.062	0.093	0.054	0.220			48.9	
113	11	17.5	11	Rc1/8	1000	50.3	60	300	44.4	100	1400	-0.024	0.040	0.027	0.080	0.025	0.015	25.5	1400
					1500			400		150	2050	-0.036	0.054	0.035	0.130			34.6	
					2000			400		150	2550	-0.048	0.065	0.040	0.170			41.5	
					2600			450		150	3200	-0.062	0.093	0.054	0.220			50.7	

Remarks: 1. NSK support unit is recommended.
2. Only rust preventive agent is applied at time of delivery. Please apply lubricant (oil or grease) before use.
3. Permissible rotational speed is determined by a d・n value and a critical speed. See page B509.