MCH09

Accuracy grade: High grade (H)

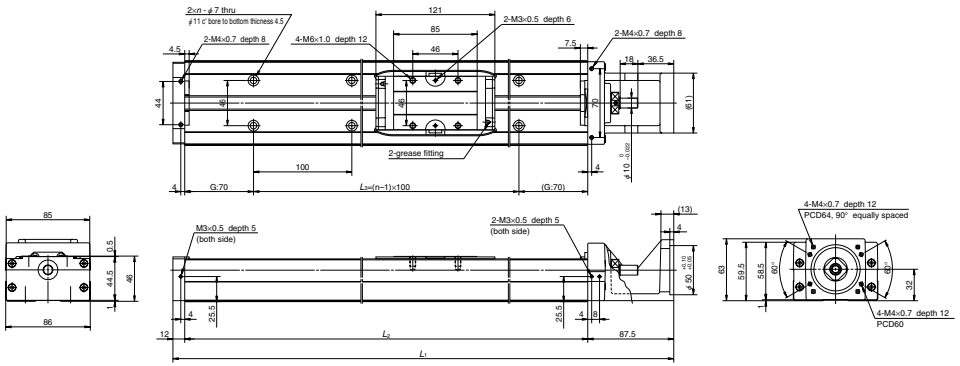

Dimension of MCH09 (Single slider)

Reference number	Nominal stroke (mm)	Stroke limit(mm) (K1 is not equipped)	Ball screw lead (mm)	Body length (mm) L_1	L_2	L_3	n	Inertia $\times10^{-6}$(kg · m^2)	Mass (kg)
MCH09020H05K	200	207	5	439.5	340	200	3	12.4	6.5
MCH09020H10K		(221)	10					13.9	
MCH09030H05K	300	307	5	539.5	440	300	4	15.6	8.1
MCH09030H10K		(321)	10					17.1	
MCH09040H05K	400	407	5	639.5	540	400	5	18.8	9.7
MCH09040H10K		(421)	10					20.3	
MCH09050H10K	500	507	10	739.5	640	500	6	23.5	11
MCH09050H20K		(521)	20					29.6	
MCH09060H10K	600	607	10	839.5	740	600	7	26.7	13
MCH09060H20K		(621)	20					32.8	
MCH09080H10K	800	807	10	1 039.5	940	800	9	33.2	16
MCH09080H20K		(821)	20					39.2	

Items not marked are available from standard stock.
Items marked with ★ are designated as "quick delivery item" upon request.

Monocarrier dynamic torque specification (N · cm)		
Ball screw lead (mm)	5	1.0～5.9
	10	2.0～7.8
	20	2.0～10.8

1. Frictional resistance of NSK K1 is included in the dynamic torque in the table.
2. Grease is packed into ball screw, linear guide parts and support unit.
3. Consult NSK for life estimates under large moment loads.

Basic load rating

Lead ℓ (mm)	Shaft dia d (mm)	Basic dynamic load rating (N) Ball screw C_a	linear guides C	Support unit C_a	Rated running distance L_a (km)	Basic static load rating (N) Ball screw C_{0a}	Linear guides C_0	Support unit Load limit (N)
5	ϕ15	6820 (High grade) 7100 (Precision)	40600	7100	5	13200 (High grade) 13000 (Precision)	30500	3040
10		5110 (High grade) 7060 (Precision)	32200		10	9290 (High grade) 12700 (Precision)		
20		3290 (High grade) 4560 (Precision)	25500		20	5620 (High grade) 7750 (Precision)		

Basic static moment load of linear guide

Slider	Basic static moment load (N · m) RollingM$_{RO}$	PitchingM$_{PO}$	YawingM$_{YO}$
Single	890	385	385

MCH09 (Double slider)

Accuracy grade: High grade (H)

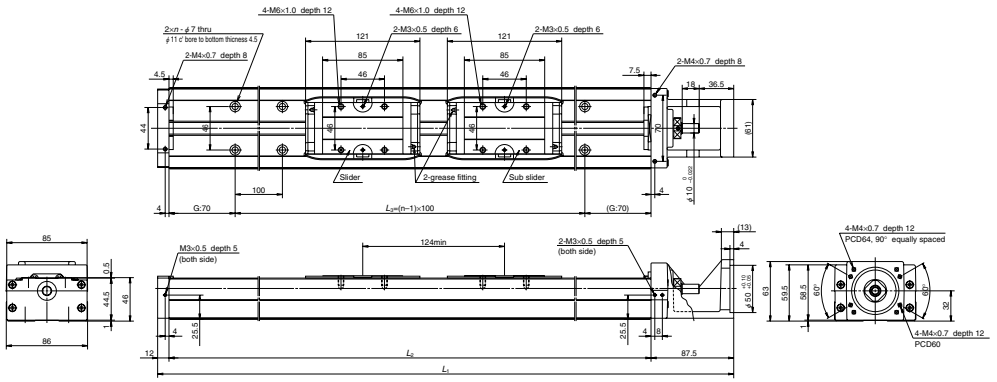

Dimension of MCH09 (Double slider)

Reference number	Nominal stroke (mm)	Stroke limit(mm) (K1 is not equipped)	Ball screw lead (mm)	Body length (mm) L_1	L_2	L_3	n	Inertia $\times10^{-6}$(kg · m^2)	Mass (kg)
★MCH09015H05D	150	183	5	539.5	440	300	4	16.1	8.9
★MCH09015H10D		(211)	10					19.2	
★MCH09025H05D	250	283	5	639.5	540	400	5	19.3	11
★MCH09025H10D		(311)	10					22.4	
★MCH09035H05D	350	383	5	739.5	640	500	6	22.5	12
★MCH09035H10D		(411)	10					25.6	
★MCH09045H10D	450	483	10	839.5	740	600	7	28.8	14
★MCH09045H20D		(511)	20					40.9	
★MCH09065H10D	650	683	10	1 039.5	940	800	9	35.2	17
★MCH09065H20D		(711)	20					47.3	

Items not marked are available from standard stock.
Items marked with ★ are designated as "quick delivery item" upon request.

Monocarrier dynamic torque specification (N · cm)		
Ball screw lead (mm)	5	1.5～7.0
	10	2.5～10.8
	20	4.0～17.2

1. Frictional resistance of NSK K1 is included in the dynamic torque in the table.
2. Grease is packed into ball screw, linear guide parts and support unit.
3. Consult NSK for life estimates under large moment loads.

Basic load rating

Lead ℓ (mm)	Shaft dia d (mm)	Basic dynamic load rating (N) Ball screw C_a	linear guides C	Support unit C_a	Rated running distance L_a (km)	Basic static load rating (N) Ball screw C_{0a}	Linear guides C_0	Support unit Load limit (N)
5	ϕ15	6820 (High grade) 7100 (Precision)	40600	7100	5	13200 (High grade) 13000 (Precision)	30500	3040
10		5110 (High grade) 7060 (Precision)	32200		10	9290 (High grade) 12700 (Precision)		
20		3290 (High grade) 4560 (Precision)	25500		20	5620 (High grade) 7750 (Precision)		

Basic static moment load of linear guide

Slider	Basic static moment load (N · m) RollingM$_{RO}$	PitchingM$_{PO}$	YawingM$_{YO}$
Double	1780	2070	2070