MCM10

Accuracy grade: High grade (H)

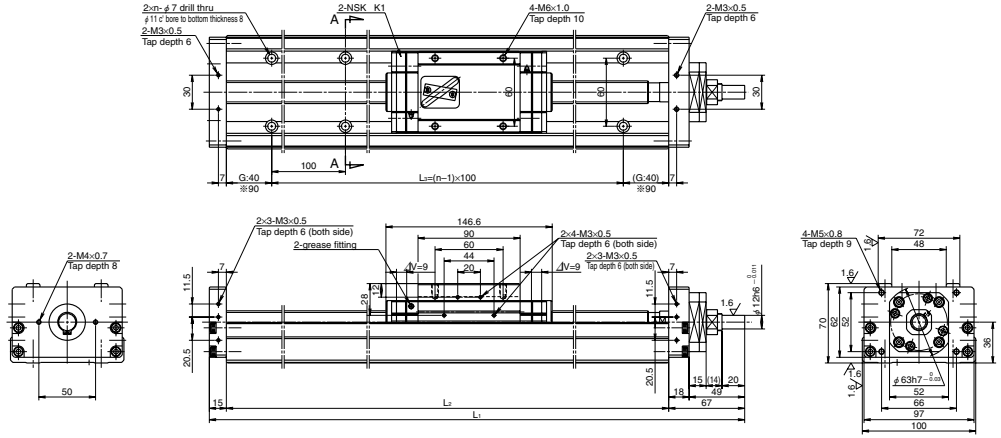

Dimension of MCM10 (Single slider) ⊿V is thickness of NSK K1

Reference number	Nominal stroke (mm)	Stroke limit(mm) (K1 is not equipped)	Ball screw lead (mm)	Body length (mm) L_1	L_2	L_3	No. of mounting hole n	Inertia ×10⁻⁴ (kg · m²)	Mass (kg)
MCM10020H10K00	200	230 (251)	10	462	380	300	4	0.425	9.5
MCM10030H10K00	300	330	10	562	480	400	5	0.519	11.2
MCM10030H20K00		(351)	20					0.633	
MCM10040H10K00	400	430	10	662	580	500	6	0.612	13.0
MCM10040H20K00		(451)	20					0.726	
★ **MCM10050H10K00**	500	530	10	762	680	600	7	0.706	14.6
★ **MCM10050H20K00**		(551)	20					0.820	
MCM10060H10K00	600	630	10	862	780	700	8	0.800	16.3
★ **MCM10060H20K00**		(651)	20					0.914	
★ **MCM10070H10K00**	700	730	10	962	880	800	9	0.893	18.0
★ **MCM10070H20K00**		(751)	20					1.007	
MCM10080H10K00	800	830	10	1062	980	900	10	0.987	19.7
★ **MCM10080H20K00**		(851)	20					1.101	
★ **MCM10090H10K00**	900	930	10	1162	1080	1000	11	1.081	21.4
★ **MCM10090H20K00**		(951)	20					1.195	
★※**MCM10100H10K00**	1000	1030	10	1262	1180	1000	11	1.174	23.1
★※**MCM10100H20K00**		(1051)	20					1.288	

Dimension G is 90 for those marked with ※.

Items not marked are available from standard stock.
Items marked with ★ are designated as "quick delivery item" upon request.

Monocarrier dynamic torque specification (N · cm)		
Ball screw lead (mm)	10	2.7～10.8
	20	3.1～12.7

1. Frictional resistance of NSK K1 is included in the dynamic torque in the table.
2. Grease is packed into ball screw, linear guide parts and support unit.
3. Consult NSK for life estimates under large moment loads.
4. Stroke limit = stroke + (15[margin] ×2)

Basic load rating

Lead ℓ (mm)	Shaft dia d (mm)	Basic dynamic load rating (N) Ball screw C_a	linear guides C	Support unit C_a	Rated running distance L_a (km)	Basic static load rating (N) Ball screw C_{0a}	Linear guides C_0	Support unit Load limit (N)
10	φ20	10900	33500	7600	10	21700	29400	3380
20		7060	26600		20	12700		

Basic static moment load of linear guide

Slider	Basic static moment load (N · m) RollingM$_{RO}$	PitchingM$_{PO}$	YawingM$_{YO}$
Single	1170	425	425

MCM10 (Double slider)

Accuracy grade: High grade (H)

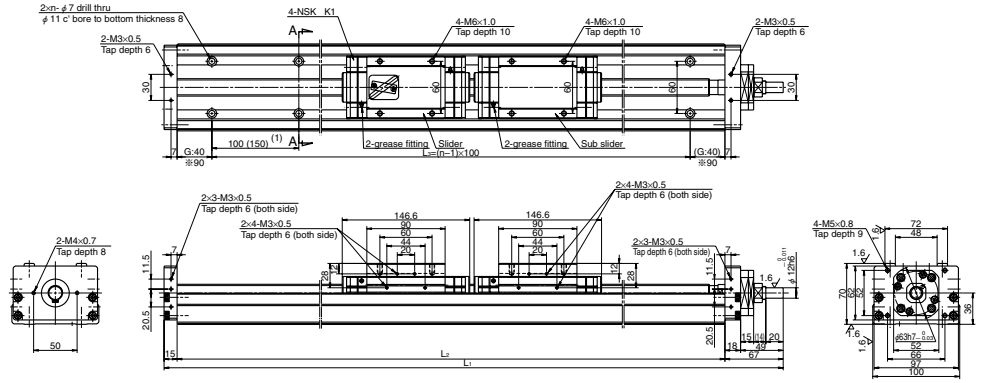

Dimension of MCM10 (Double slider) ⊿V is thickness of NSK K1

Reference number	Nominal stroke (mm)	Stroke limit(mm) (K1 is not equipped)	Ball screw lead (mm)	Body length (mm) L_1	L_2	L_3	No. of mounting hole n	Inertia ×10⁻⁴ (kg · m²)	Mass (kg)
★●**MCM10007H10D00**	70	86 (122)	10	462	380	300	3	0.463	11.0
★ **MCM10017H10D00**	170	186	10	562	480	400	5	0.557	12.7
★ **MCM10017H20D00**		(222)	20					0.785	
★ **MCM10027H10D00**	270	286	10	662	580	500	6	0.650	13.4
★ **MCM10027H20D00**		(322)	20					0.878	
★ **MCM10037H10D00**	370	386	10	762	680	600	7	0.744	15.1
★ **MCM10037H20D00**		(422)	20					0.972	
★ **MCM10047H10D00**	470	486	10	862	780	700	8	0.838	17.8
★ **MCM10047H20D00**		(522)	20					1.066	
★ **MCM10057H10D00**	570	586	10	962	880	800	9	0.931	19.5
★ **MCM10057H20D00**		(622)	20					1.159	
★ **MCM10067H10D00**	670	686	10	1062	980	900	10	1.025	21.2
★ **MCM10067H20D00**		(722)	20					1.253	
★※**MCM10087H10D00**	870	886	10	1262	1180	1000	11	1.212	23.6
★※**MCM10087H20D00**		(922)	20					1.440	

Dimension G is 90 for those marked with ※.
Dimension (1) is 150mm for those marked with ●.

Items not marked are available from standard stock.
Items marked with ★ are designated as "quick delivery item" upon request.

Monocarrier dynamic torque specification (N · cm)		
Ball screw lead (mm)	10	4.2～15.6
	20	5.0～19.6

1. Frictional resistance of NSK K1 is included in the dynamic torque in the table.
2. Grease is packed into ball screw, linear guide parts and support unit.
3. Consult NSK for life estimates under large moment loads.
4. Stroke limit = stroke + (8.4[margin] ×2)

Basic load rating

Lead ℓ (mm)	Shaft dia d (mm)	Basic dynamic load rating (N) Ball screw C_a	linear guides C	Support unit C_a	Rated running distance L_a (km)	Basic static load rating (N) Ball screw C_{0a}	Linear guides C_0	Support unit Load limit (N)
10	φ20	10900	33500	7600	10	21700	29400	3380
20		7060	26600		20	12700		

Basic static moment load of linear guide

Slider	Basic static moment load (N · m) RollingM$_{RO}$	PitchingM$_{PO}$	YawingM$_{YO}$
Double	2340	2940	2940